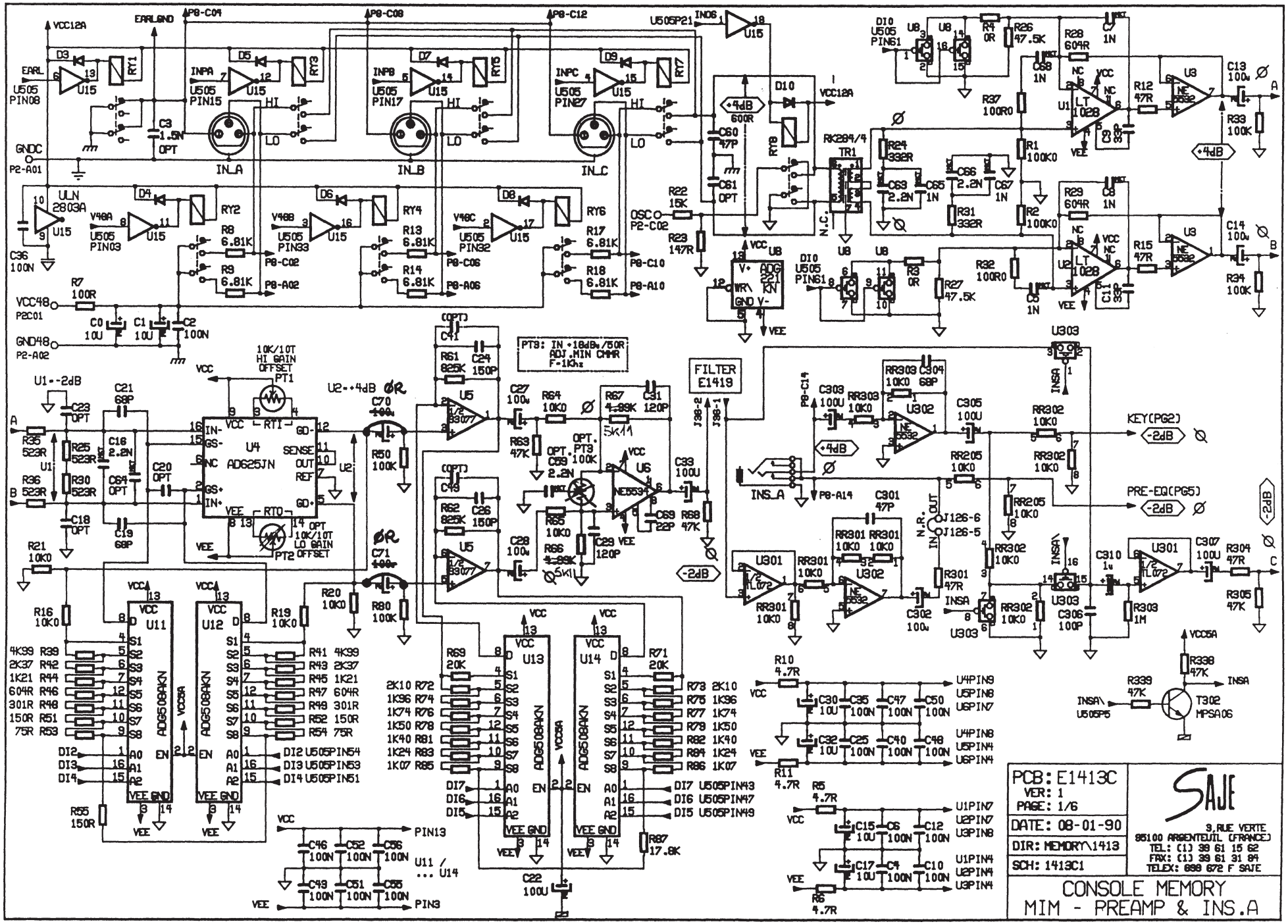
PCB: E1413C
VER: 1
PAGE: 1/6
DATE: 08-01-90
DIR: MEMORY\1413
SCH: 1413C1
SAJE
9, RUE VERTE
95100 ARGENTEUIL (FRANCE)
TEL: (1) 39 61 15 62
FAX: (1) 39 61 31 84
TELEX: 699 672 F SAJE
CONSOLE MEMORY
MIM - PREAMP & INS.A
FILTER E1419
PT3: IN +18dB/50R ADJ.MIN CMRR F-1Khz
KEY(PG2)
PRE-EQ(PG5)
IN_A
IN_B
IN_C
U4 AD625JN
U5 NE5534
U6 NE5534
U301 TL072
U302 NE5532
U303
U11 ADG508AKN
U12 ADG508AKN
U13 ADG508AKN
U14 ADG508AKN
U15 ULN 2803A
U1 LT 1028
U2 LT 1028
U3 NE 5532
U8 ADG 221 KN
TR1 RK284/4
T302 MPSA06

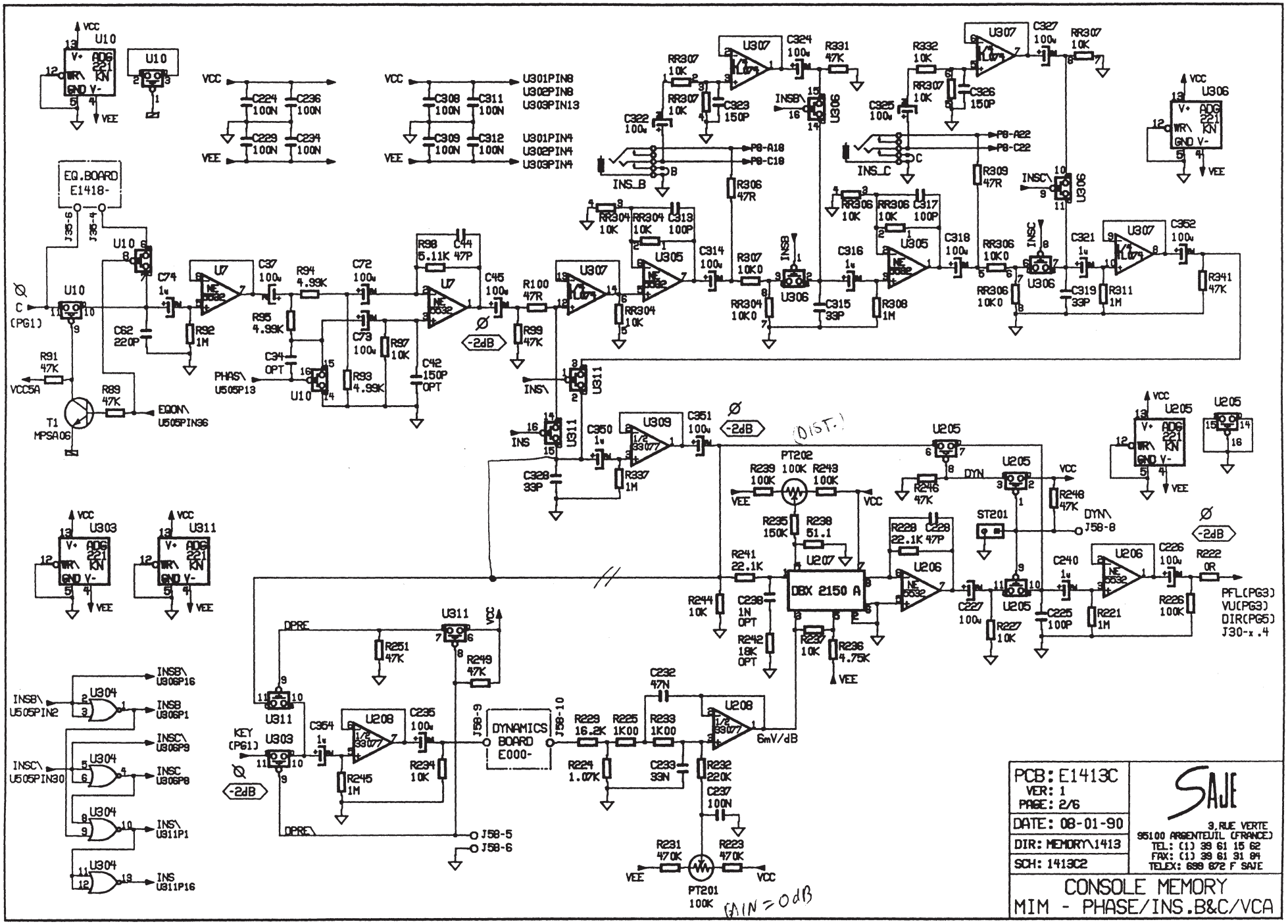
PCB: E1413C
VER: 1
PAGE: 2/6
DATE: 08-01-90
DIR: MEMORY\1413
SCH: 1413C2
SAJE
3, RUE VERTE
95100 ARGENTEUIL (FRANCE)
TEL: (1) 39 61 15 62
FAX: (1) 39 61 31 84
TELEX: 699 872 F SAJE
CONSOLE MEMORY
MIM - PHASE/INS.B&C/VCA
DYNAMICS BOARD E000-
EQ.BOARD E1418-
DBX 2150 A
GAIN = 0dB

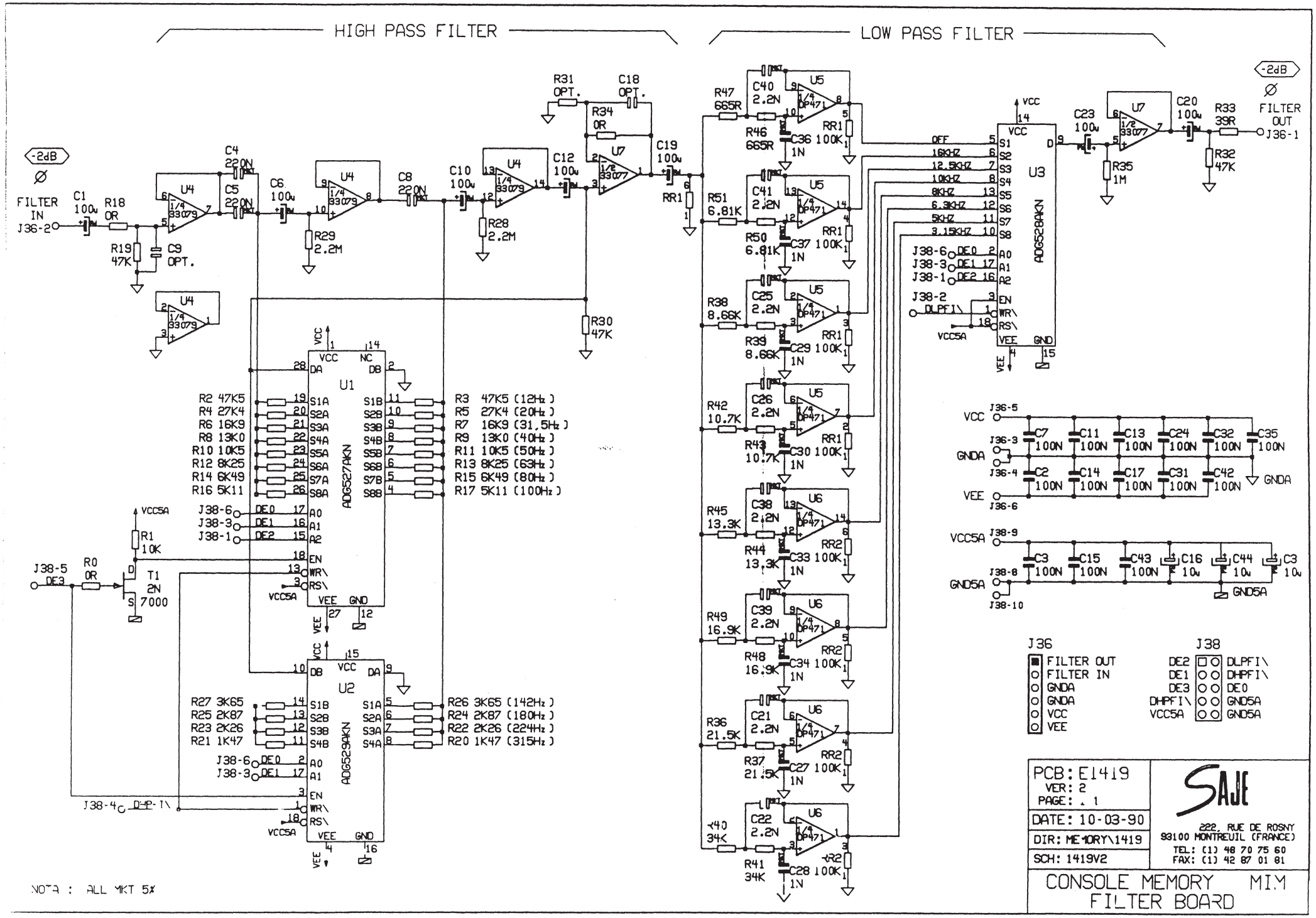
HIGH PASS FILTER
LOW PASS FILTER
-2dB
FILTER IN
J36-2
C1 100u
R18 0R
R19 47K
C9 OPT.
C4 220N
C5 220N
C6 100u
R29 2.2M
C8 220N
C10 100u
R28 2.2M
R31 OPT.
C18 OPT.
R34 0R
C12 100u
C19 100u
R30 47K
RR1
U1
U2
U3
U4
U5
U6
U7
ADG527AKN
ADG529AKN
ADG528AKN
R2 47K5
R4 27K4
R6 16K9
R8 13K0
R10 10K5
R12 8K25
R14 6K49
R16 5K11
R3 47K5 (12Hz)
R5 27K4 (20Hz)
R7 16K9 (31.5Hz)
R9 13K0 (40Hz)
R11 10K5 (50Hz)
R13 8K25 (63Hz)
R15 6K49 (80Hz)
R17 5K11 (100Hz)
R27 3K65
R25 2K87
R23 2K26
R21 1K47
R26 3K65 (142Hz)
R24 2K87 (180Hz)
R22 2K26 (224Hz)
R20 1K47 (315Hz)
J38-5
DE3
R0 0R
R1 10K
T1 2N 7000
VCC5A
J38-4
DHP-I\
R47 665R
R46 665R
C40 2.2N
C36 1N
R51 6.81K
R50 6.81K
C41 2.2N
C37 1N
R38 8.66K
R39 8.66K
C25 2.2N
C29 1N
R42 10.7K
R43 10.7K
C26 2.2N
C30 1N
R45 13.3K
R44 13.3K
C38 2.2N
C33 1N
R49 16.9K
R48 16.9K
C39 2.2N
C34 1N
R36 21.5K
R37 21.5K
C21 2.2N
C27 1N
R40 34K
R41 34K
C22 2.2N
C28 1N
RR2
OFF
16KHZ
12.5KHZ
10KHZ
8KHZ
6.3KHZ
5KHZ
3.15KHZ
J38-6
J38-3
J38-1
J38-2
DLPFI\
C23 100u
R35 1M
C20 100u
R33 39R
R32 47K
FILTER OUT
J36-1
VCC
GNDA
VEE
VCC5A
GND5A
C7 100N
C11 100N
C13 100N
C24 100N
C32 100N
C35 100N
C2 100N
C14 100N
C17 100N
C31 100N
C42 100N
C3 100N
C15 100N
C43 100N
C16 10u
C44 10u
J36
FILTER OUT
FILTER IN
GNDA
GNDA
VCC
VEE
J38
DE2
DE1
DE3
DHPFI\
VCC5A
DLPFI\
DHPFI\
DE0
GND5A
GND5A
NOTA : ALL MKT 5%
PCB: E1419
VER: 2
PAGE: 1
DATE: 10-03-90
DIR: ME10RY\1419
SCH: 1419V2
SAJE
222, RUE DE ROSNY
93100 MONTREUIL (FRANCE)
TEL: (1) 48 70 75 60
FAX: (1) 42 87 01 81
CONSOLE MEMORY MIM
FILTER BOARD

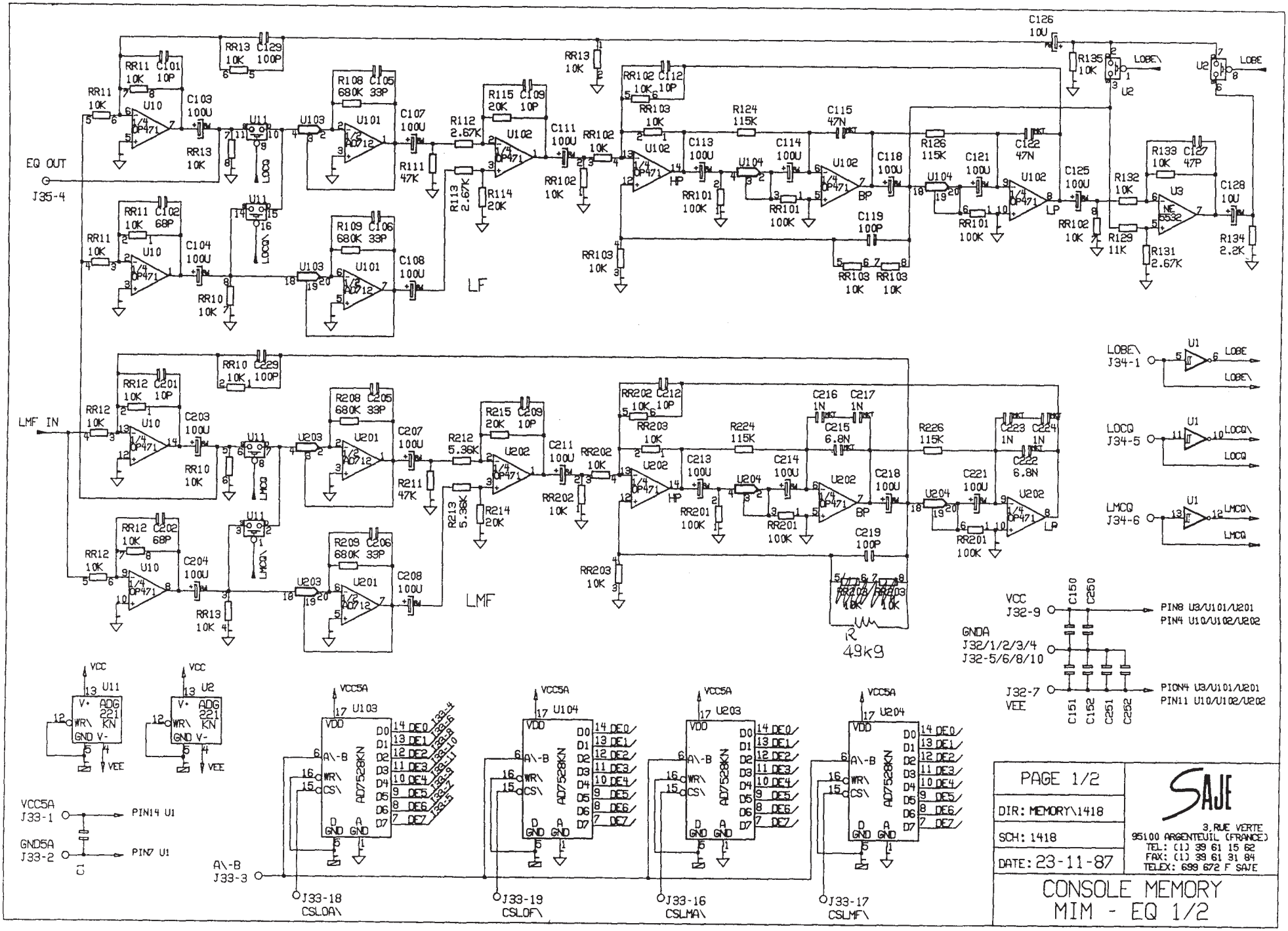
EQ OUT
J35-4
LF
LMF IN
LMF
LOBE\
J34-1
LOCQ
J34-5
LMCQ
J34-6
VCC
J32-9
PIN8 U3/U101/U201
PIN4 U10/U102/U202
GNDA
J32/1/2/3/4
J32-5/6/8/10
J32-7
VEE
PION4 U3/U101/U201
PIN11 U10/U102/U202
VCC5A
J33-1
PIN14 U1
GND5A
J33-2
PIN7 U1
A\-B
J33-3
J33-18
CSLOA\
J33-19
CSLOF\
J33-16
CSLMA\
J33-17
CSLMF\
PAGE 1/2
DIR: MEMORY\1418
SCH: 1418
DATE: 23-11-87
SAJE
3, RUE VERTE
95100 ARGENTEUIL (FRANCE)
TEL: (1) 39 61 15 62
FAX: (1) 39 61 31 84
TELEX: 699 672 F SAJE
CONSOLE MEMORY
MIM - EQ 1/2

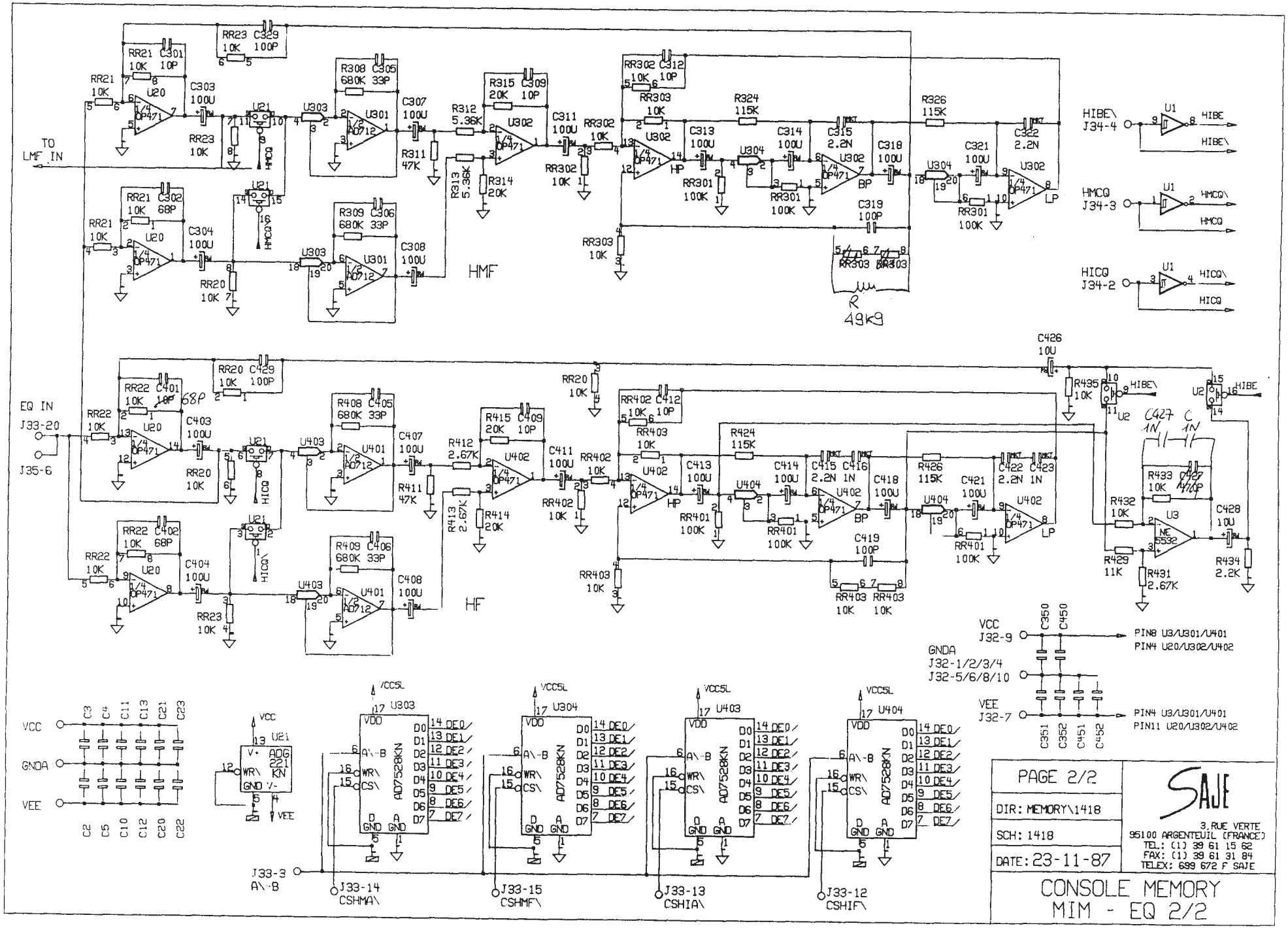
TO LMF IN
HMF
HF
EQ IN
J33-20
J35-6
HIBE\
J34-4
HMCQ
J34-3
HICQ
J34-2
R 49K9
VCC
J32-9
GNDA
J32-1/2/3/4
J32-5/6/8/10
VEE
J32-7
PIN8 U3/U301/U401
PIN4 U20/U302/U402
PIN4 U3/U301/U401
PIN11 U20/U302/U402
J33-3
A\-B
J33-14
CSHMA\
J33-15
CSHMF\
J33-13
CSHIA\
J33-12
CSHIF\
PAGE 2/2
DIR: MEMORY\1418
SCH: 1418
DATE: 23-11-87
SAJE
3, RUE VERTE
95100 ARGENTEUIL (FRANCE)
TEL: (1) 39 61 15 62
FAX: (1) 39 61 31 84
TELEX: 699 672 F SAJE
CONSOLE MEMORY
MIM - EQ 2/2

33079 ≙ TL 074CN

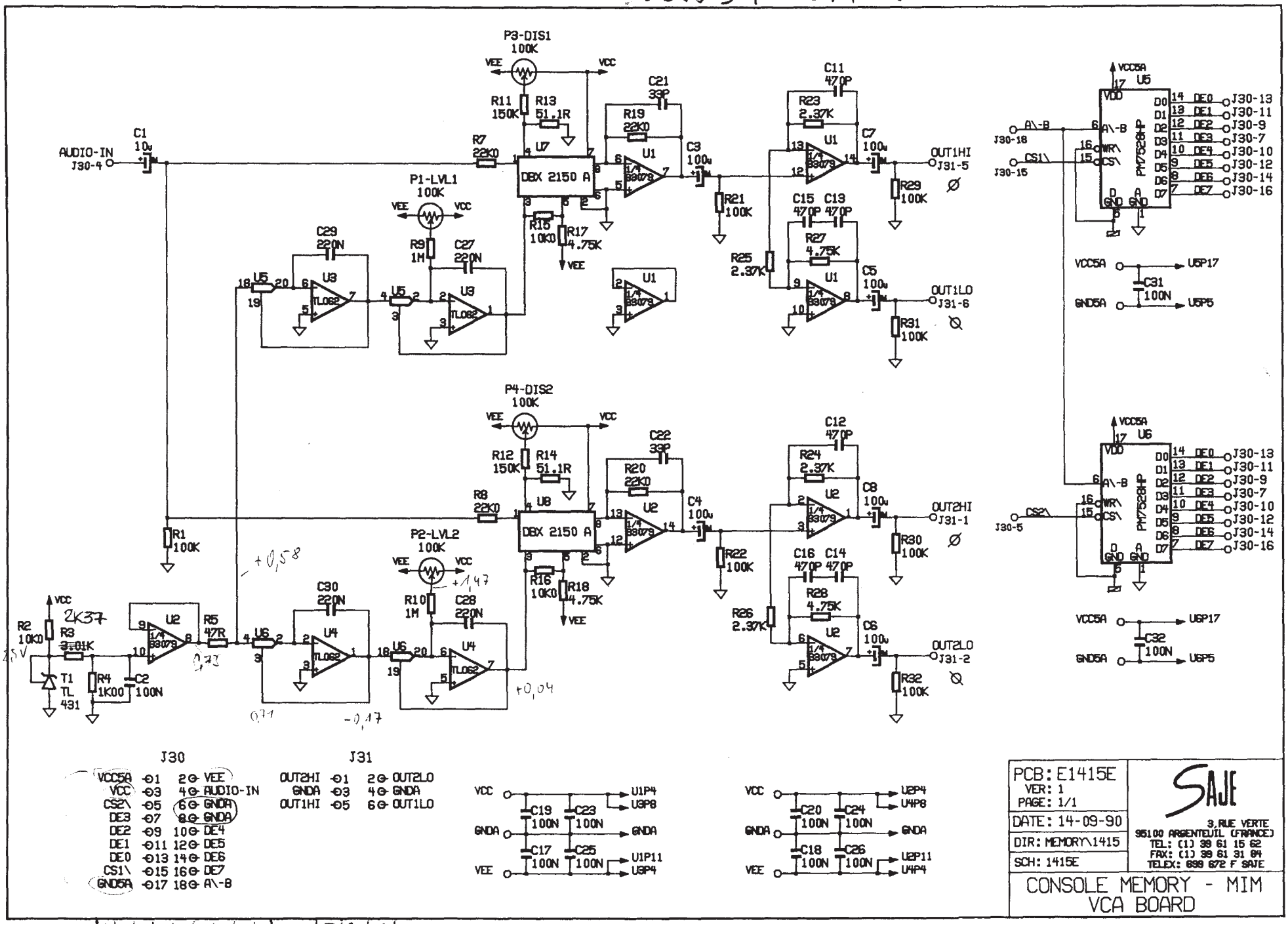

PCB: E1415E
VER: 1
PAGE: 1/1
DATE: 14-09-90
DIR: MEMORY\1415
SCH: 1415E

SAJE
3, RUE VERTE
95100 ARGENTEUIL (FRANCE)
TEL: (1) 39 61 15 62
FAX: (1) 39 61 31 84
TELEX: 699 672 F SAJE

CONSOLE MEMORY - MIM
VCA BOARD

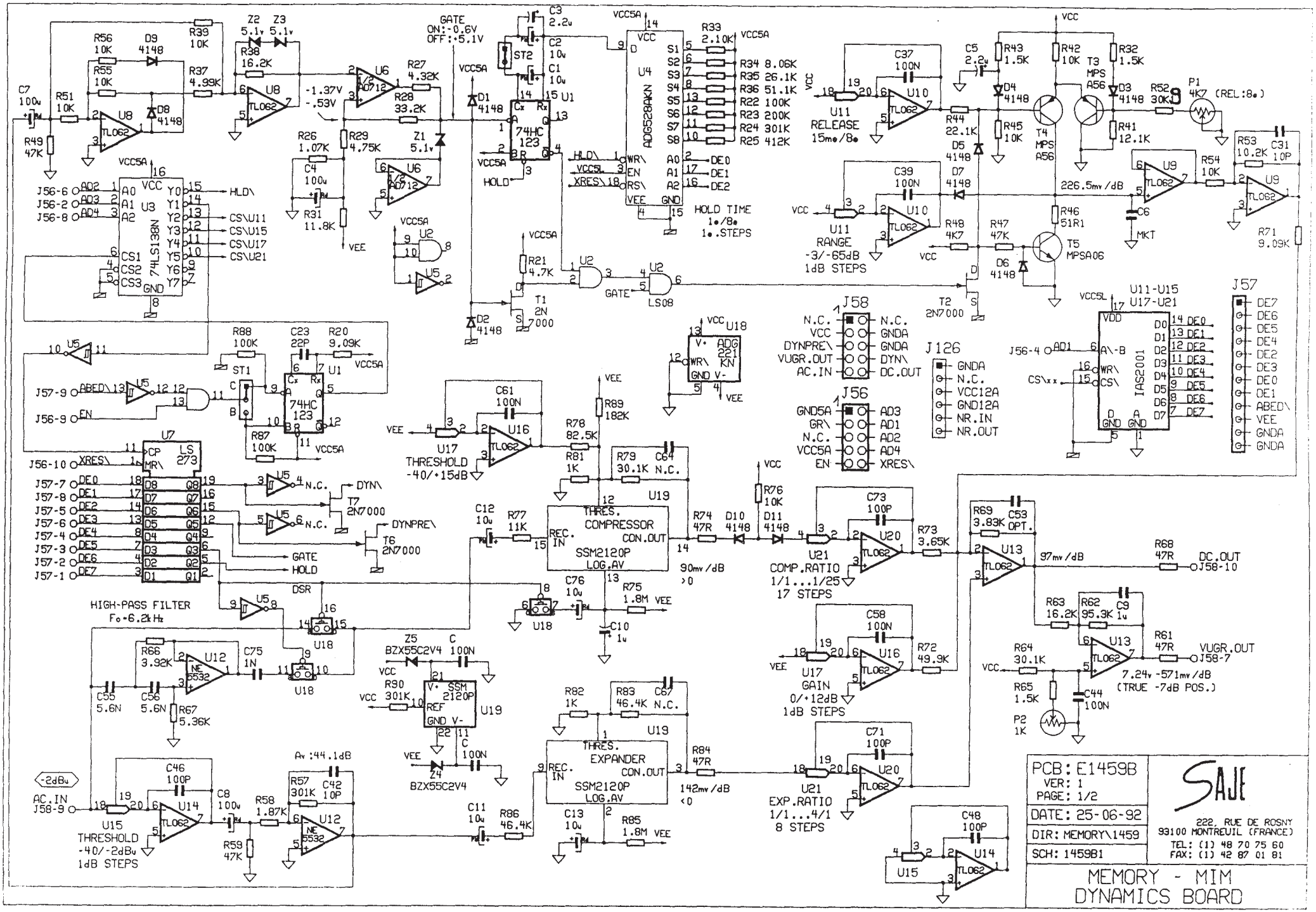
PCB: E1459B
VER: 1
PAGE: 1/2
DATE: 25-06-92
DIR: MEMORY\1459
SCH: 1459B1
SAJE
222, RUE DE ROSNY
93100 MONTREUIL (FRANCE)
TEL: (1) 48 70 75 60
FAX: (1) 42 87 01 81
MEMORY - MIM
DYNAMICS BOARD
HIGH-PASS FILTER
Fo=6.2kHz
THRESHOLD
-40/-2dBu
1dB STEPS
THRESHOLD
-40/+15dB
COMP.RATIO
1/1...1/25
17 STEPS
GAIN
0/+12dB
1dB STEPS
EXP.RATIO
1/1...4/1
8 STEPS
RELEASE
15me/8e
RANGE
-3/-65dB
1dB STEPS
HOLD TIME
1e/8e
1e.STEPS
THRES.
COMPRESSOR
SSM2120P
LOG.AV
THRES.
EXPANDER
SSM2120P
LOG.AV
74HC
123
74LS138N
LS
273
IAS2001
ADG
221
KN
ADG528AKN
TL062
NE
5532
90mv/dB
>0
142mv/dB
<0
97mv/dB
226.5mv/dB
7.24v -571mv/dB
(TRUE -7dB POS.)
DC.OUT
VUGR.OUT
AC.IN
Av :44.1dB
GATE
ON:-0.6V
OFF:-5.1V
-1.37V
-.53V
HLD\
CS\U11
CS\U15
CS\U17
CS\U21
DE0
DE1
DE2
DE3
DE4
DE5
DE6
DE7
ABED\
VEE
GNDA
GND
VCC
VCC5A
VCC5L
DYN\
DYNPRE\
GATE
HOLD
DSR
XRES\
EN
AD1
AD2
AD3
AD4
N.C.
GND12A
VCC12A
NR.IN
NR.OUT
DYNPRE\
VUGR.OUT
AC.IN
DC.OUT
GR\
U11-U15
U17-U21
(REL:8e)
(TRUE -7dB POS.)